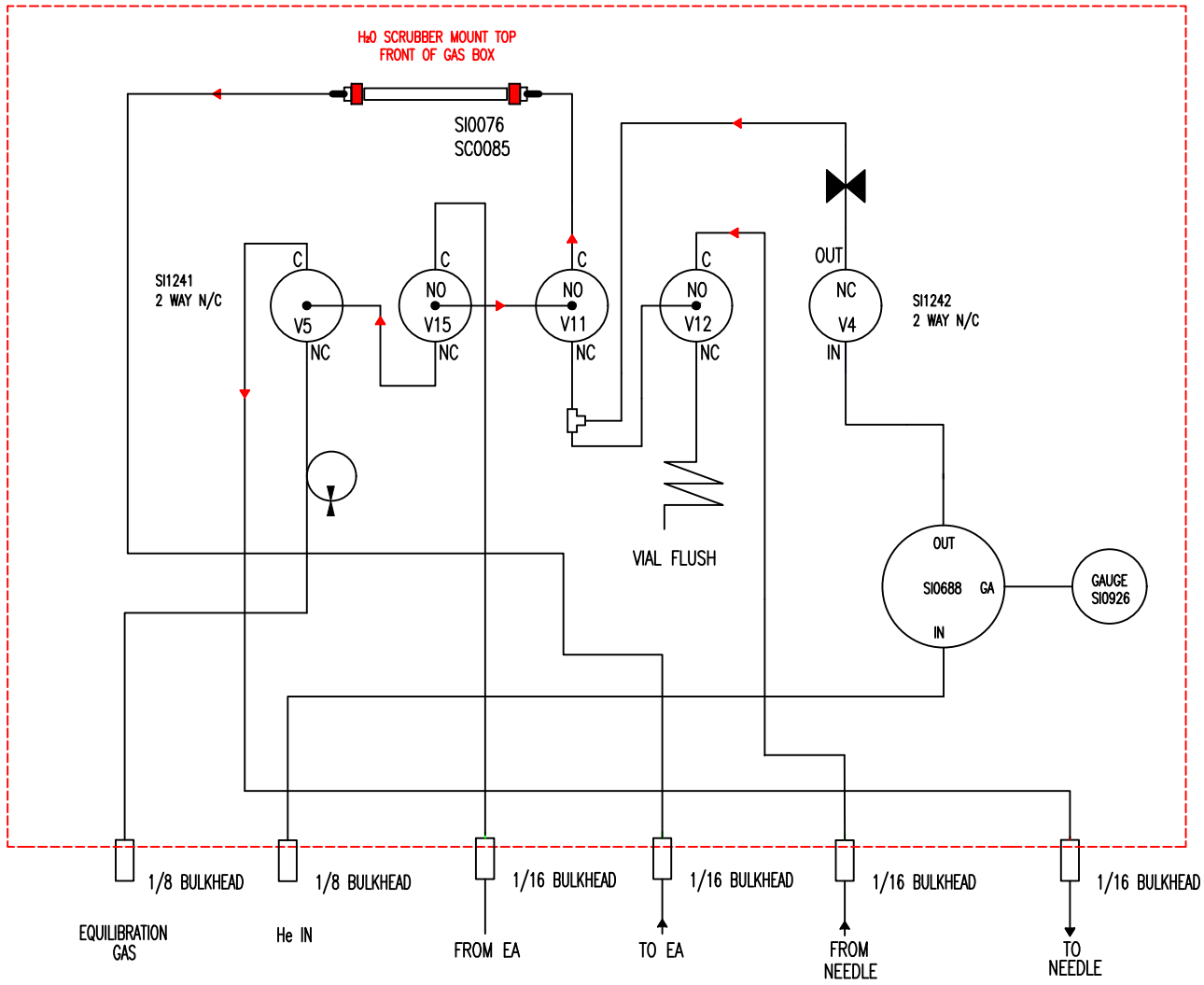

15 WAY D TYPE PLUG

	VALVE NO	COLOUR	PINS
ACID PUMP - FORWARD	V2	R/B	1/9
ACID PUMP - REVERSE	V3	O/B	2/10
	V4	Y/B	3/11
	V5	G/B	4/12
	V11	L/L	5/13
	V12	R/L	6/14
	V15	G/L	7/15

REV.	ISSUED BY	DESCRIPTION	DATE	REV. No.
C	DW	ISSUED FOR BUILD	06/12/19	C

REMOVE ALL BURRS & SHARP EDGES — DO NOT SCALE

MATL.

FINISH

ALL DIMENSIONS IN MILLIMETERS

TOLERANCES UNLESS OTHERWISE STATED
±0.15° ANGULAR
SURFACE FINISH 1.6µ
0. ±1
0.00 ±0.1
0.0 ±0.2

THIRD ANGLE

DRG. SIZE A2

SCALE NTS

TITLE
XYZ GAS CONTROL BOX

DRG No
10202-004-036

SERCON LTD

STRICTLY CONFIDENTIAL COPYRIGHT SSERCON ©